REVISION			
REV	DESCRIPTION	DATE	BY

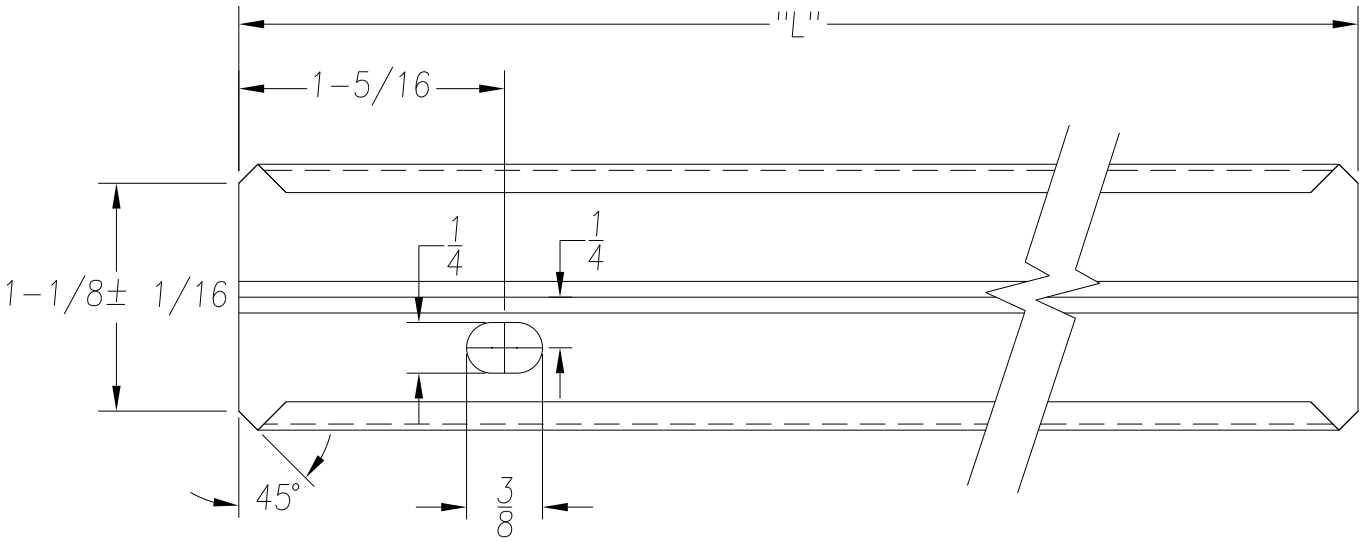

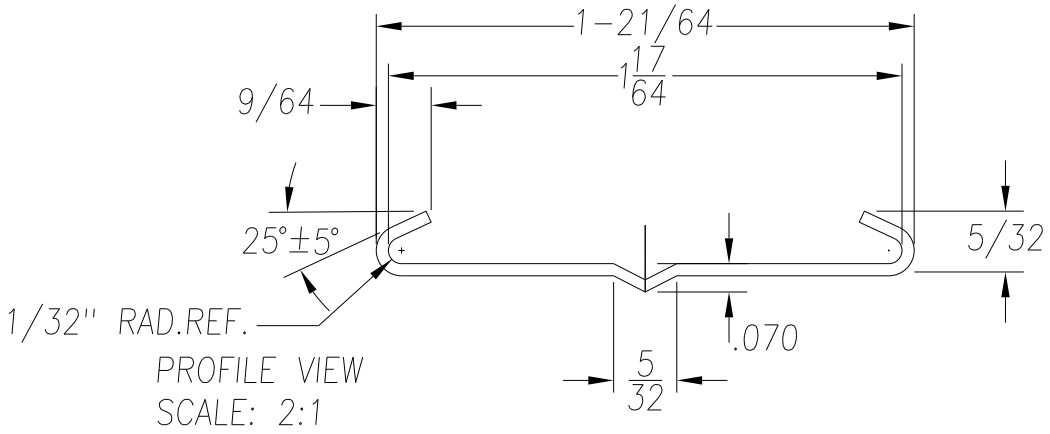

SEE PO FOR MATERIAL TYPE AND FINISH
FOR LENGTH DIMENSION ("L"), SEE PURCHASE ORDER.
LENGTH TOLERANCE:LESS THAN 60": ±1/16" LESS THAN 120": ±1/8", 120" OR GREATER: ± 1/4"
MAXIMUM BURR NOT TO EXCEED 10% OF MAT'L THICKNESS WITH THE EXCEPTION OF CUT ENDS,
WHICH MAY HAVE BURR EXCEEDING THIS AMOUNT.
FINISHED PART MAY EXHIBIT TYPICAL ROLL FORMED END CUT DISTORTION.
PROFILE DIMENSIONS TO BE MEASURED 2" OR GREATER FROM CUT ENDS.

MATERIAL	GAUGE 22	WIDTH	FINISH
ALLOY	THIS DRAWING AND ITS CONTENTS ARE CONFIDENTIAL AND ARE NOT TO BE REPRODUCED, USED OR COPIED IN WHOLE OR IN PART OR DISCLOSED TO OTHERS EXCEPT AS AUTHORIZED BY SAMSON ROLL FORM PRODUCTS	SAMSON ROLL FORMED PRODUCTS PH 847-965-6700 FAX 847-965-8950 6101 W OAKTON ST. SKOKIE, IL 60077	
TEMPER			
WT. PER M/FT.			

-TOLERANCES- NOT INDICATED	DRAWN BY: D.R.M.	DATE: 9-22-82	TITLE: PRICE CARD HOLDER	
.XXX ±.010 .XX ±.030 .X ±.060	CHECKED BY:	DATE:	SIZE A	CUSTOMER
FRACTIONAL ±1/32 ANGLES ±1°	DO NOT SCALE THIS DRAWING	SCALE: NONE	DRAWING # S-1642	SHEET # / REV.